GRID LOCATION	BOTTOM ELEVATION
3/D	-1'-4"

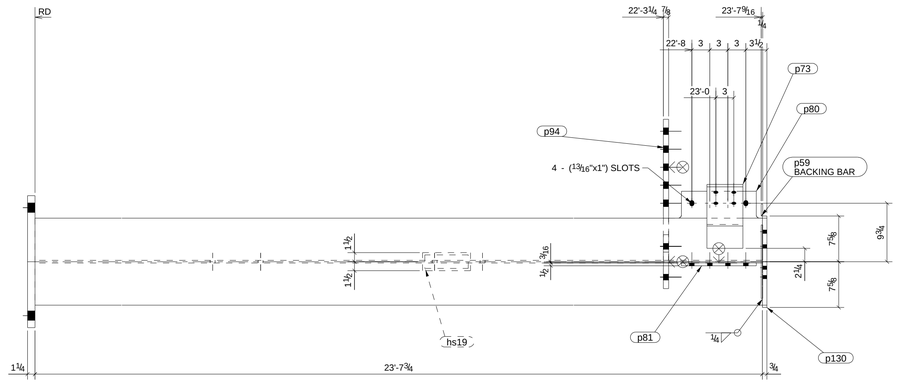

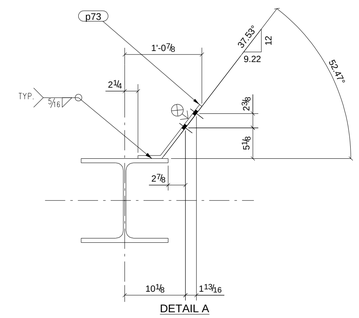

DETAIL A

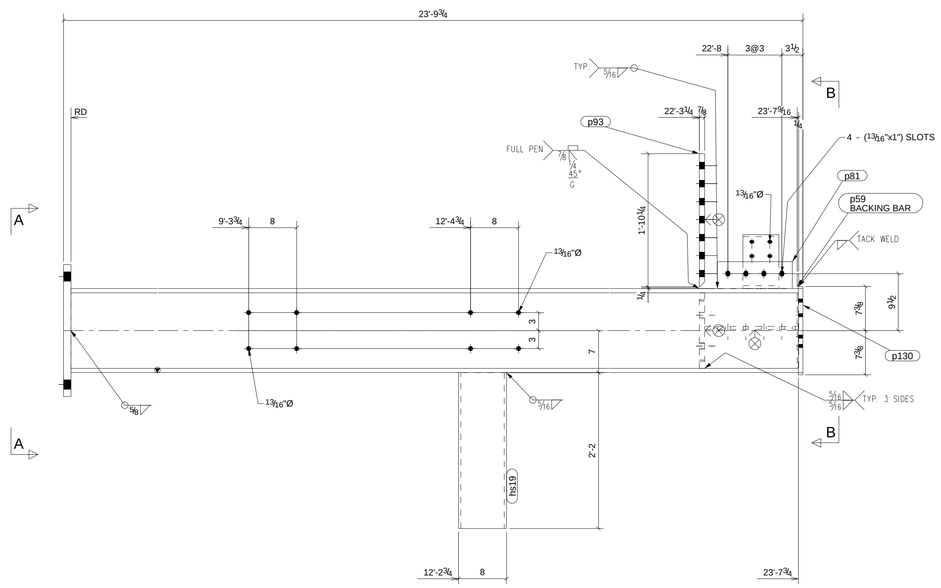

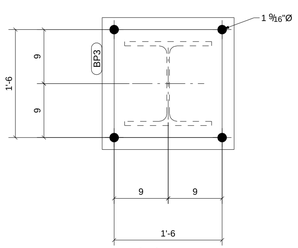

A - A

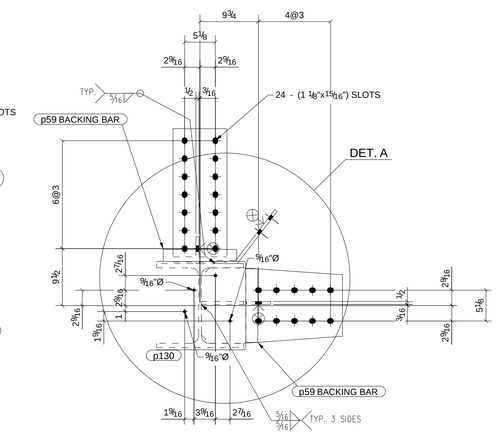

B - B

ONE - COLUMN - CW1

BILL OF MATERIAL

Qty Ea.	Qty Tot	Piece Mark	Description	Length	Weight Total	Remarks	Adv Mill #	Steel Grade
	1	CW1	COLUMN					
1	1		W14X90	23'-7 3/4"	2132	SQ-2		A992
1	1	BP3	PL1 1/4"X22"	1'-10"	172			A572-GR.50
1	1	hs19	HSS8X3X3/8	2'-2"	51			A500-GR.B
2	2	p59	FL1/4"X2"	1'-0 1/4"	3			A36
1	1	p73	FL1/2"X6"	1'-2 7/16"	13			A36
1	1	p80	PL1/2"X11 1/2"	1'-3 5/8"	24			A36
1	1	p81	FL1/2"X4 1/2"	1'-0 1/2"	8			A36
1	1	p93	FL7/8"X9"	1'-10 1/4"	49			A36
1	1	p94	PL7/8"X12 9/16"	1'-11 1/2"	68			A36
1	1	p130	PL3/4"X14 3/4"	1'-3 1/4"	48			A36
	24		7/8"Ø A490SC_DTI BOLT	3"		Site		
	8		3/4"Ø A490SC_DTI BOLT	2 1/4"		Site		
	4		3/4"Ø A325SC_DTI BOLT	2 1/4"		Site		

3" NO PAINT AROUND ALL OF THE HOLES

STEEL ASTM	A992	UNO
ELECTRODES	E70xx	UNO
WELDS	1/4" FILLET MIN.	UNO
OPEN HOLES	13/16"	UNO
BOLTS	A325N	UNO
PAINT	1 COAT SHOP PRIMER	UNO

PROJECT NAME	PNC Bank - Buckhead
LOCATION	Atlanta, GA
CONTRACTOR	Structor Group, Inc.
ARCHITECT	Gensler

AISC CERTIFIED FABRICATOR

DATE	NO.	DESCRIPTION	BY
05/19/2015	1	Changed Base Plate Weld to 5/8"	DB
04/29/2015	0	For Fabrication	DB
03/06/2015	A	For Approval	DB

S.T. METAL WORKS, INC.
MARIETTA, GA
770-499-7386 FAX 770-428-7462 www.stmetalworks.co

DESCRIPTION	DATE	JOB No.
COLUMN DETAILS	03/31/2014	
	DRAWN BY: DB / CHKD BY: DB	DRG No. CW1